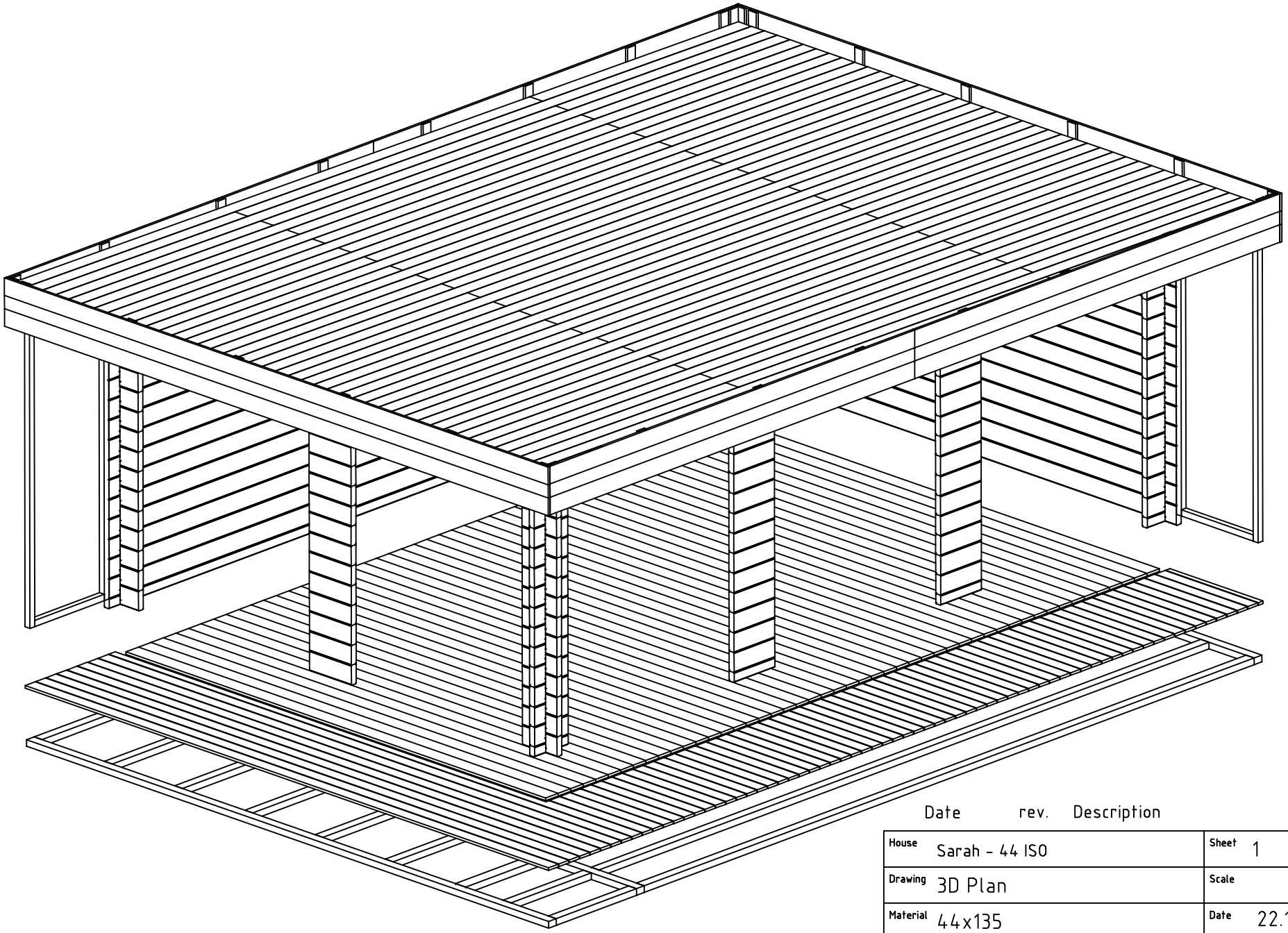

Date	rev.	Description

House	Sarah - 44 ISO	Sheet	1
Drawing	3D Plan	Scale	
Material	44x135	Date	22.11.2019
Drawer	K.K.	File	Sarah - 44 ISO 3D.dwg

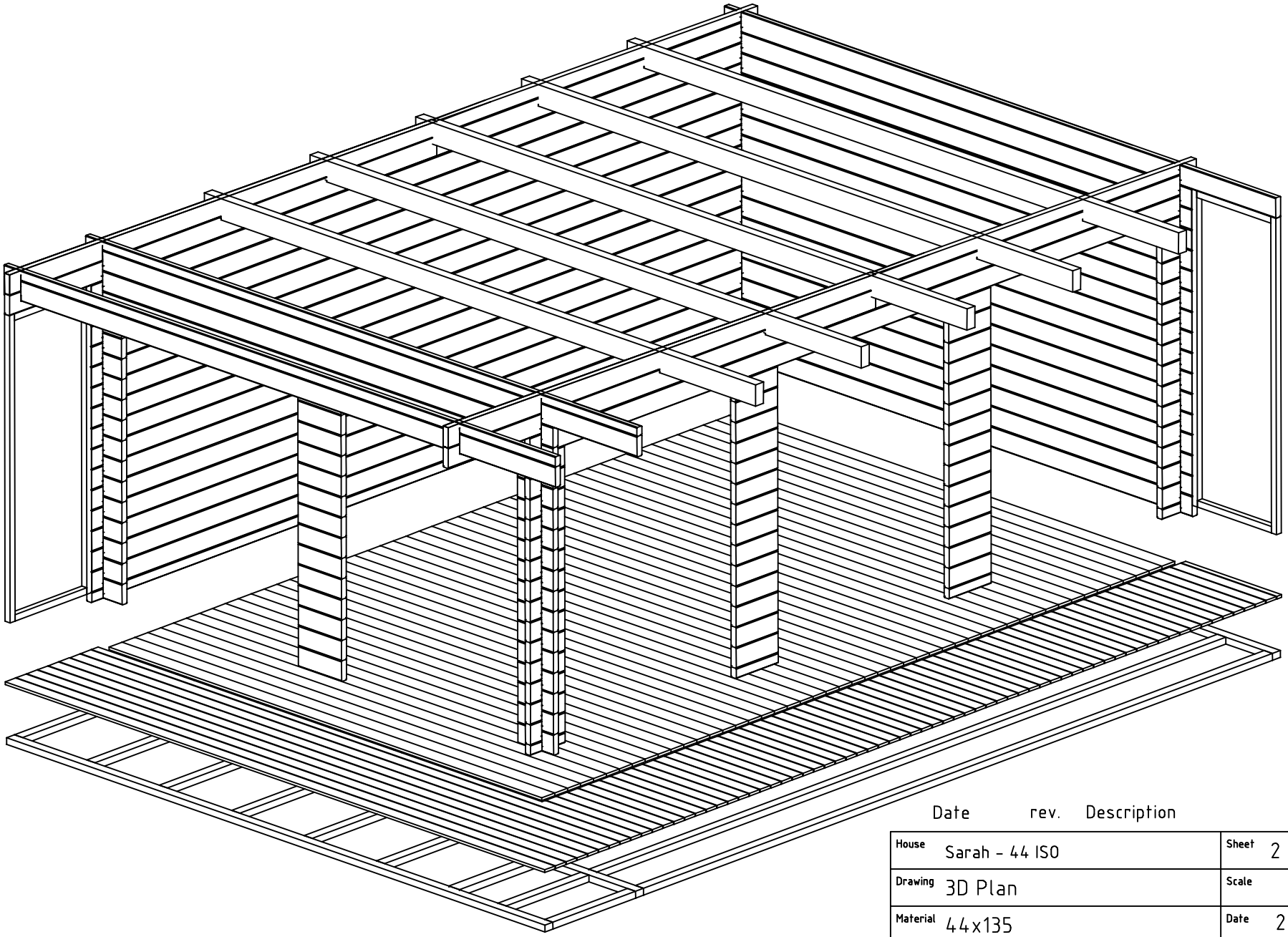

Date	rev.	Description

House	Sarah - 44 ISO	Sheet	2
Drawing	3D Plan	Scale	
Material	44x135	Date	22.11.2019
Drawer	K.K.	File	Sarah - 44 ISO 3D.dwg

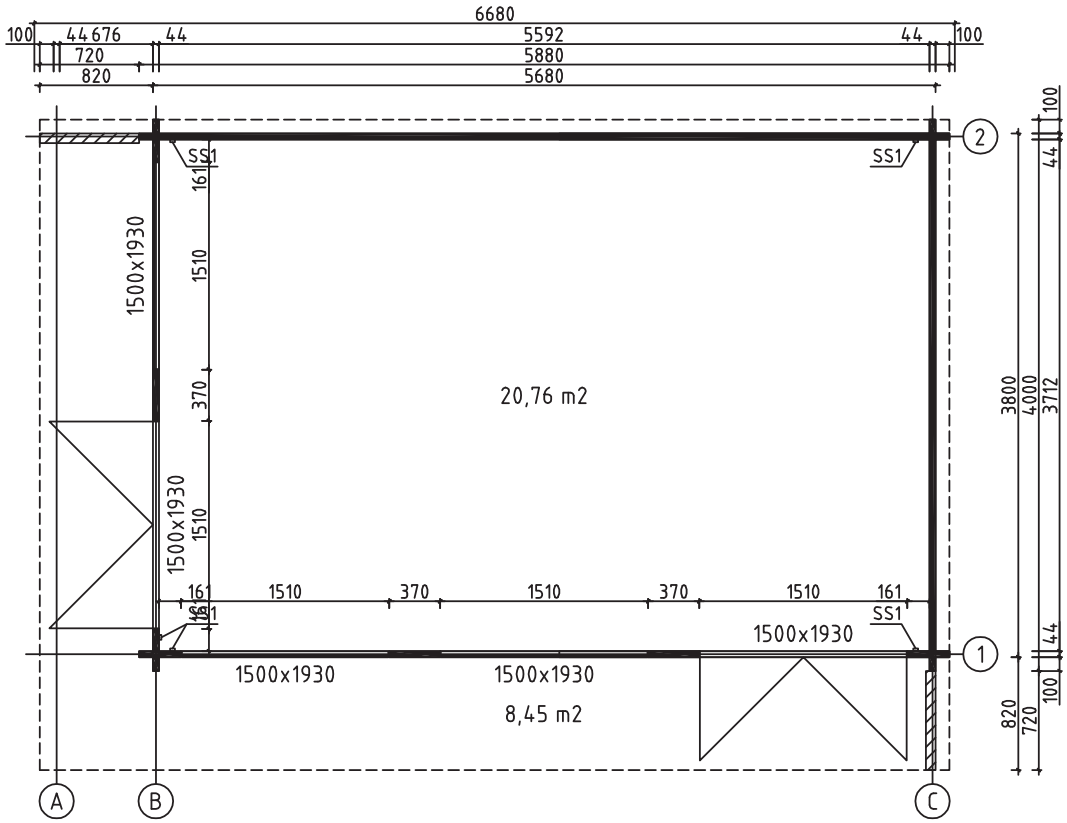

House	Sarah - 44 ISO	Sheet	3
Drawing	GROUNDPLAN-GRUNDPLAN-PLAN	Scale	1:50
Material	44x135	Date	04.11.2019
Drawer	K.K.	File	Sarah - 44 ISO.dwg

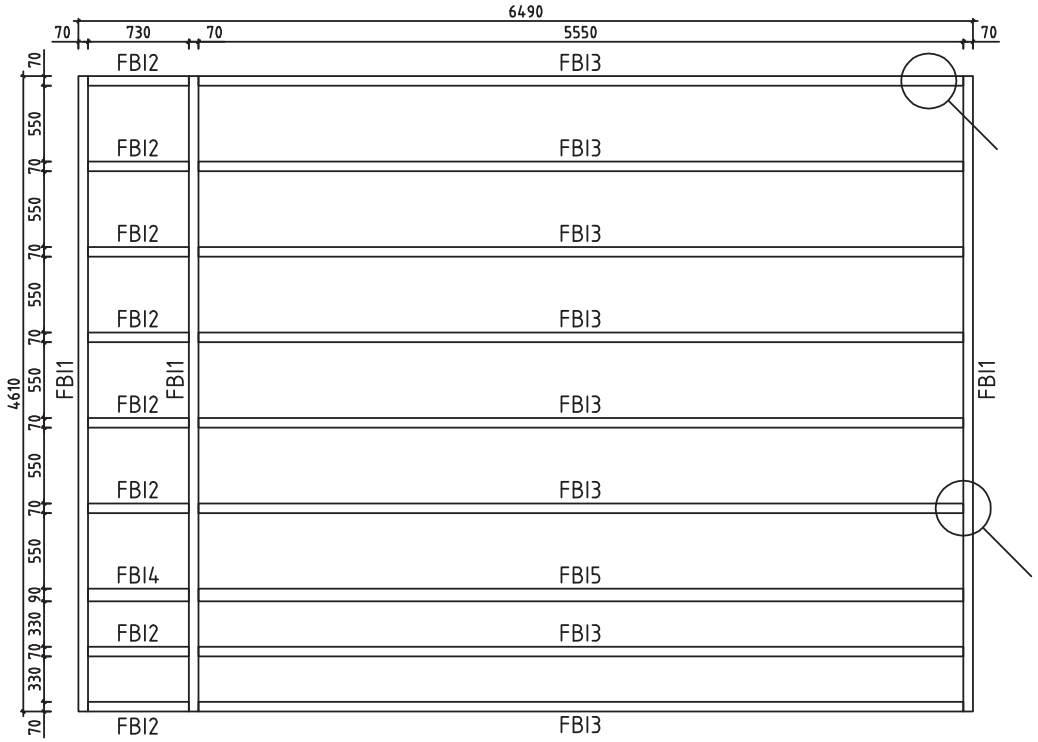

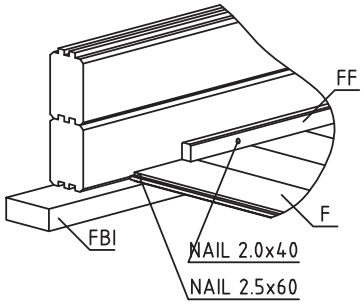

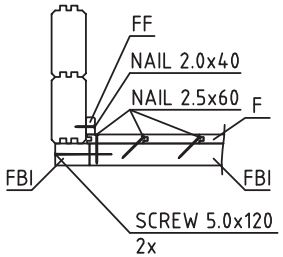

House	Sarah - 44 ISO	Sheet	4
Drawing	FLOORBEAMS-FUSSBODENBALKEN-VLOERBALKEN	Scale	1:50
Material	70x45, 90x45	Date	04.11.2019
Drawer	K.K.	File	Sarah - 44 ISO.dwg

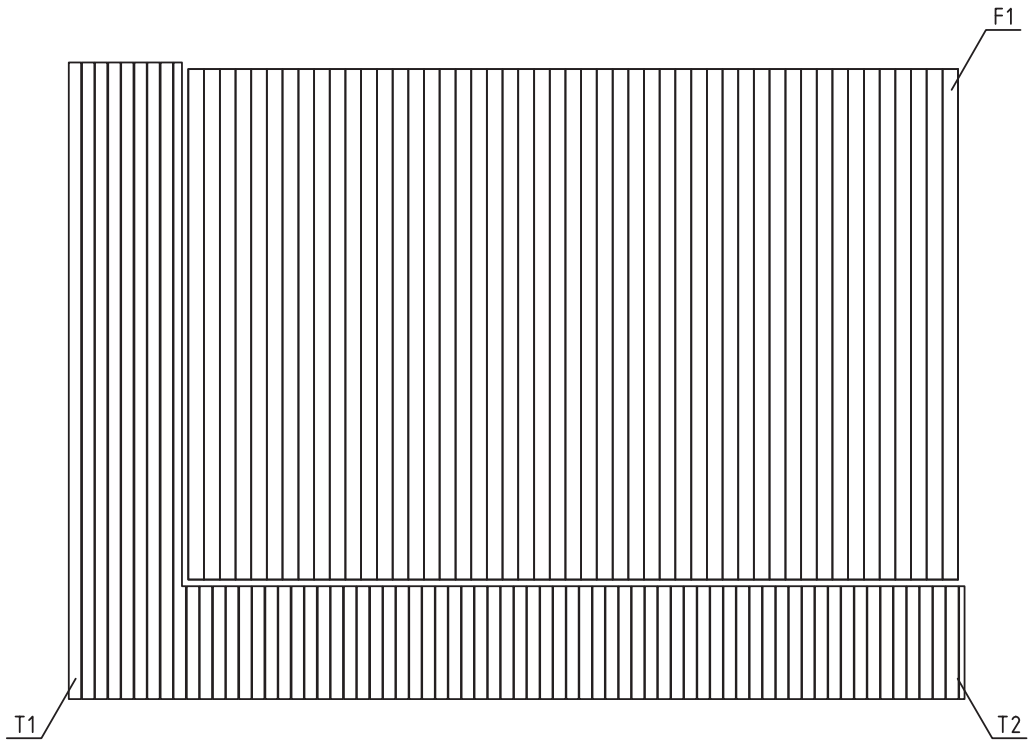

House	Sarah - 44 ISO	Sheet	5
Drawing	FLOORBOARD-FUSSBODENBRETT-VLOERPLANK	Scale	1:50
Material	18x114, 18x90	Date	04.11.2019
Drawer	K.K.	File	Sarah - 44 ISO.dwg

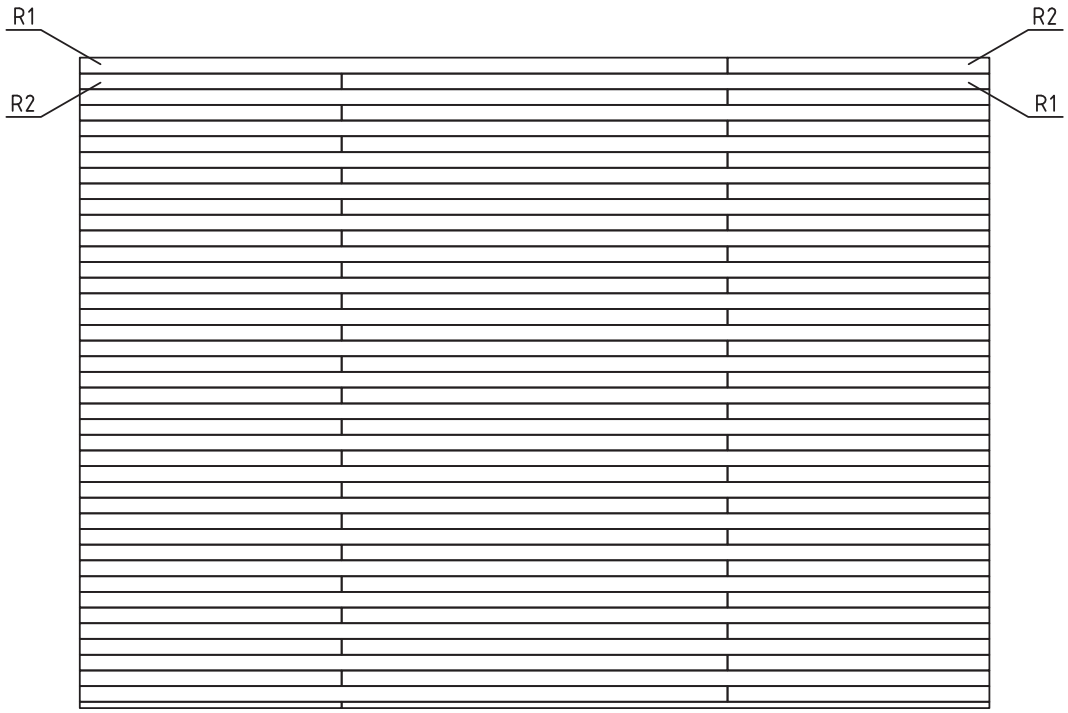

House	Sarah - 44 ISO	Sheet	6
Drawing	ROOFBOARD-DACHBRETT-DAKPLANK	Scale	1:50
Material	18x114	Date	04.11.2019
Drawer	K.K.	File	Sarah - 44 ISO.dwg

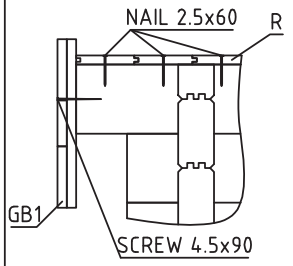

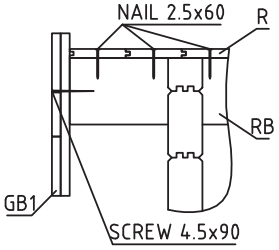

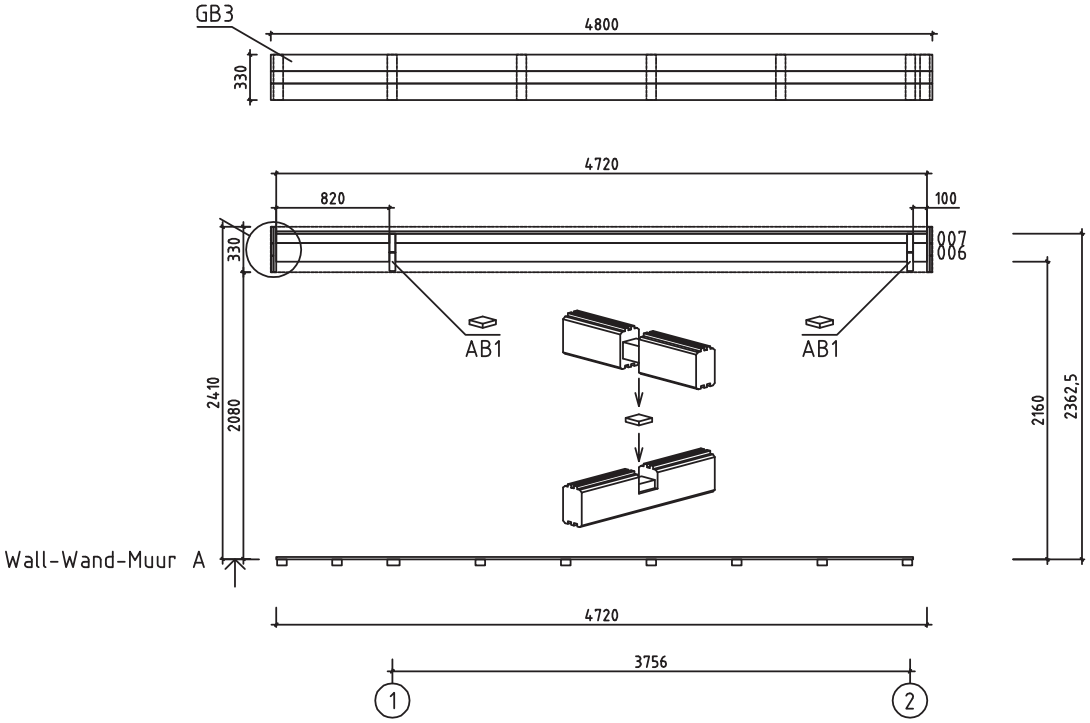

House	Sarah - 44 ISO	Sheet	7
Drawing	WALL-WAND-MUUR A	Scale	1:50
Material	44x135	Date	04.11.2019
Drawer	K.K.	File	Sarah - 44 ISO.dwg

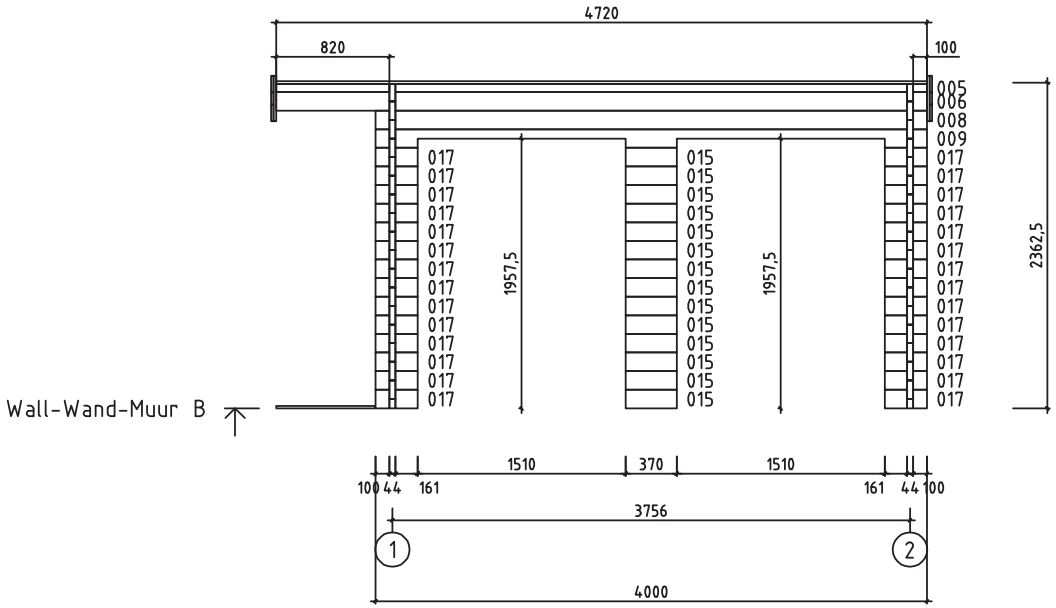

House	Sarah - 44 ISO	Sheet	8
Drawing	WALL-WAND-MUUR B	Scale	1:50
Material	44x135	Date	04.11.2019
Drawer	K.K.	File	Sarah - 44 ISO.dwg

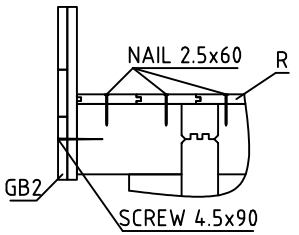

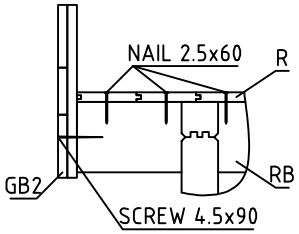

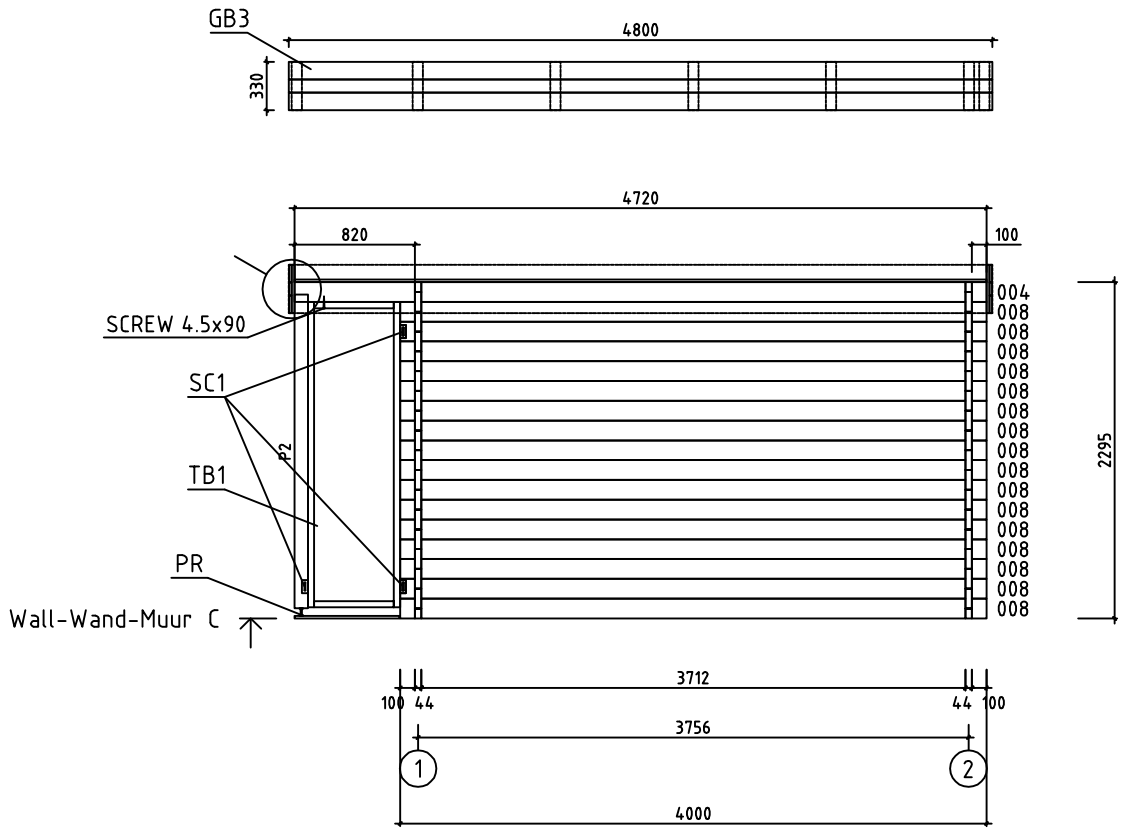

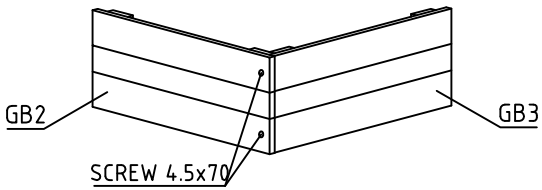

House	Sarah - 44 ISO	Sheet	9
Drawing	WALL-WAND-MUUR C	Scale	1:50
Material	44x135	Date	04.11.2019
Drawer	K.K.	File	Sarah - 44 ISO.dwg

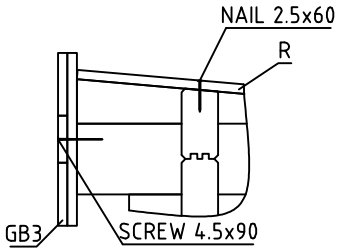

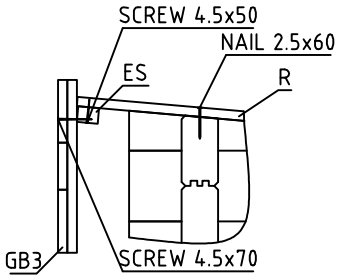

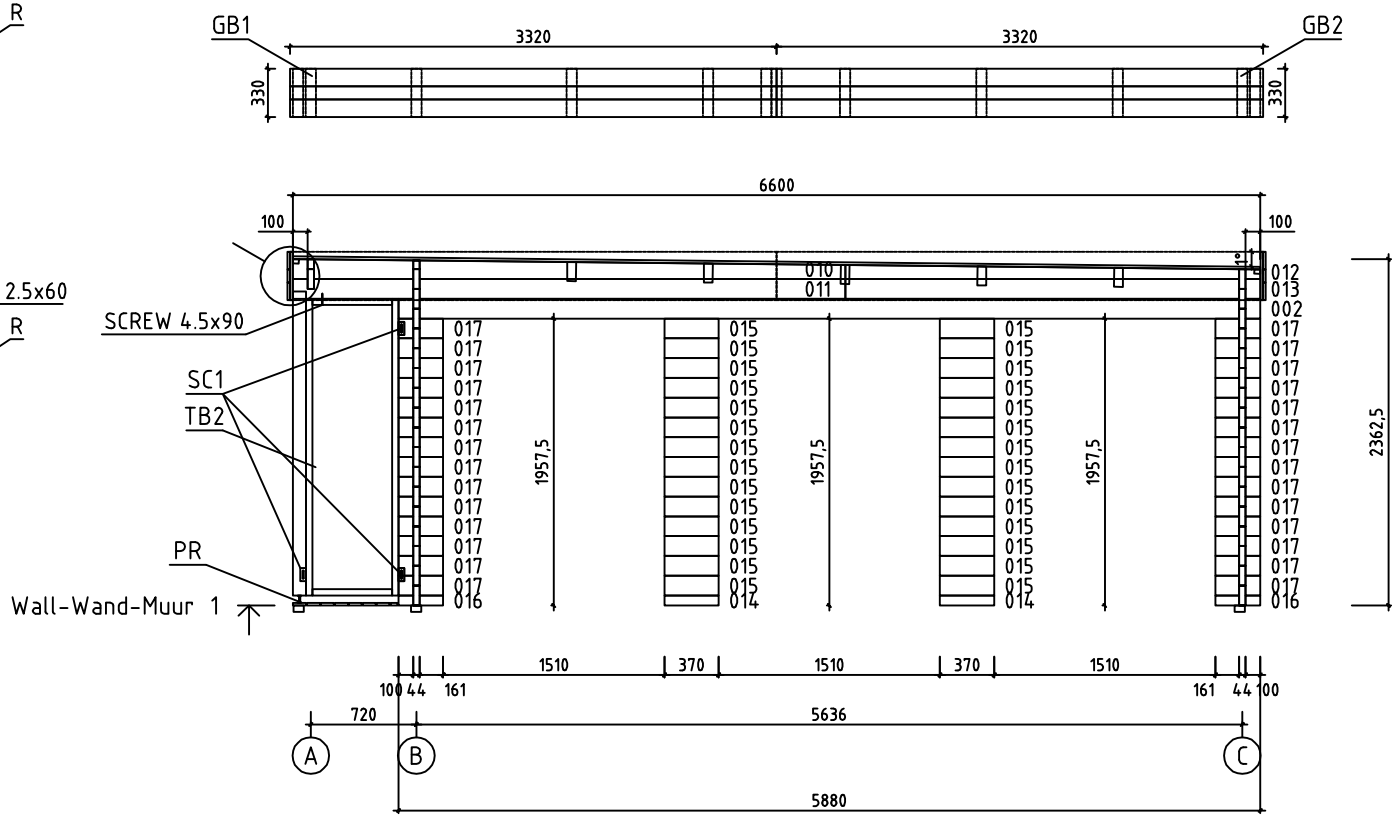

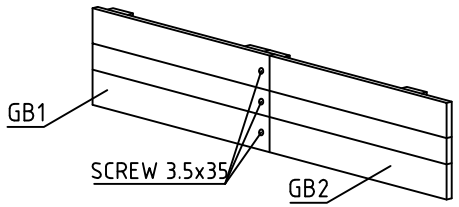

House	Sarah - 44 ISO	Sheet	10
Drawing	WALL-WAND-MUUR 1	Scale	1:50
Material	44x135	Date	04.11.2019
Drawer	K.K.	File	Sarah - 44 ISO.dwg

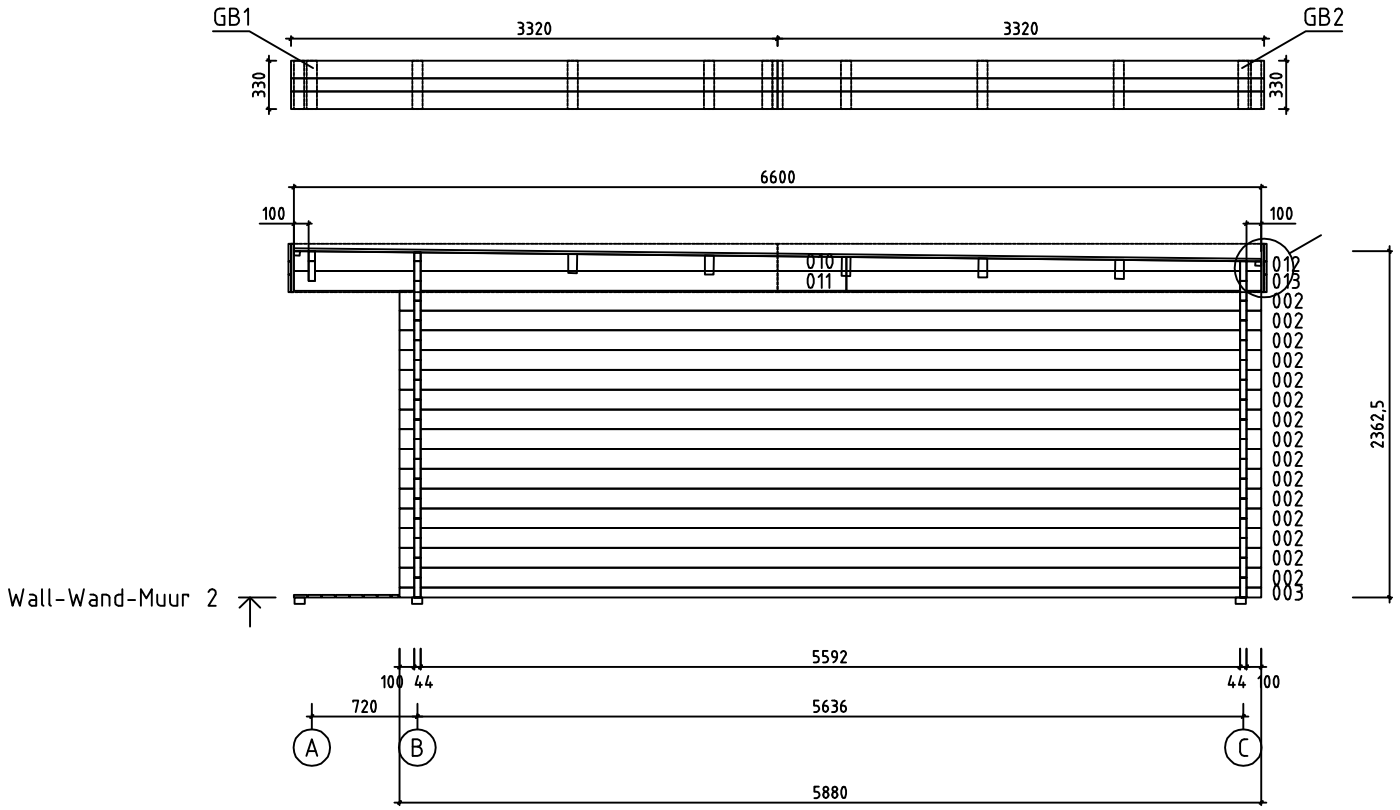

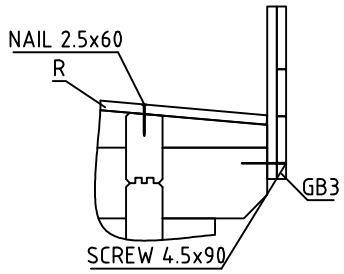

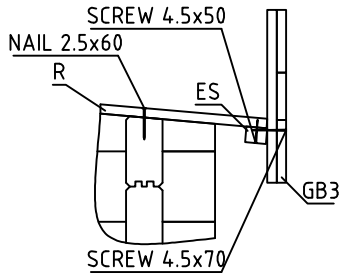

House	Sarah - 44 ISO	Sheet	11
Drawing	WALL-WAND-MUUR 2	Scale	1:50
Material	44x135	Date	04.11.2019
Drawer	K.K.	File	Sarah - 44 ISO.dwg

Pos	Specification-Bestimmung-Omschrijving	Pcs	Profile (mm)	L (mm)
001	SPARE BEAM-ERZATZBOHLE-VOORRAADPLANK 100 5592 100	1	44x135	5880
002	100 5592 100	16	44x135	5880
003	100 5592 100	1	44x68	5880
004	820 3712 100	1	44x135	4720
005	820 3712 100	1	44x60	4720
006	820 3712 100	2	44x135	4720
007	820 3712 100	1	44x68	4720
008	100 3712 100	17	44x135	4000
009	100 3712 100	1	44x135	4000
014		2	44x68	370
015		42	44x135	370
016	100 161	2	44x68	305
017	100 161	56	44x135	305
W1-1 W2-1	270 010 011 012 013 6600	2	44x270	6600
HB	HIT BLOCK-SCHLAGHÖLZER-BLAZENPLANK	2	44x135	300
FBI5 FBI4	FLOORBEAMS-FUSSBODENBALKEN-VLOERBALKEN IMM	1 1	90x45	5550 730
FBI3 FBI1	FLOORBEAMS-FUSSBODENBALKEN-VLOERBALKEN IMM	8 3	70x45	5550 4610
FBI2	FLOORBEAMS-FUSSBODENBALKEN-VLOERBALKEN IMM	8	70x45	730
P1	POST-PFOSTEN-STUT	1	90x90	2075
P2	POST-PFOSTEN-STUT	1	90x90	2140
RB1	ROOFBEAMS-DACHBALKEN-DAKBALK 820 3712 100	5	70x140	4720
F1	FLOORBOARD-FUSSBODENBRETT-VLOERPLANK or-oder-of	49+1 64+1	18x114 18x88	3705
R1	ROOFBOARD-DACHBRETT-DAKPLANK or-oder-of	42+1 55+1	18x114 18x88	4700
R2	ROOFBOARD-DACHBRETT-DAKPLANK or-oder-of	42+1 55+1	18x114 18x88	1900

House Sarah - 44 ISO	Material	File Sarah - 44 ISO.dwg	Sheet 12

Pos	Specification-Bestimmung-Omschrijving	Pcs	Profile (mm)	L (mm)
T1	TERRACE BOARD-TERRASSENBRETT-TERRASSPLANK IMM	9+1	18x90	4620
T2	TERRACE BOARD-TERRASSENBRETT-TERRASSPLANK IMM	60+1	18x90	820
FF1	FLOOR FILLET-FUSSBODENLEISTE-VLOERPLINT		18x35	19m
GB1	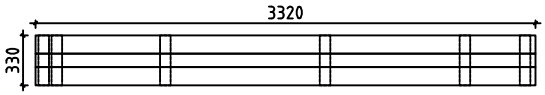	2	36x330	3320
GB2	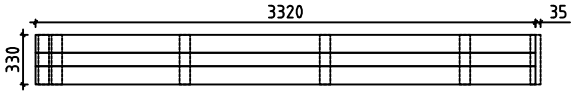	2	36x330	3320+35
GB3	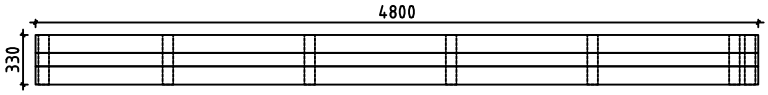	2	36x330	4800
ES1	EAVE SLAT-TRAUFENLEISTE-AFDEKLIJST	2	30x40	3710
ES2	EAVE SLAT-TRAUFENLEISTE-AFDEKLIJST	2	30x40	820
ES3	EAVE SLAT-TRAUFENLEISTE-AFDEKLIJST	2	30x40	100
AB1	ASSEMBLING BOARD-MONTAGE BOARD-MONTAGE PLANK	2	15x30	30
SS1	STORM SLAT-STURMLEISTE-STORMLIJST	5	18x35	2160
SC1	STEEL CORNER-STAHL ECKE-STALEN HOEK	6	35x130	35
	SCREWS-SCHRAUBEN-SCHROEF FOR-FÜR-VOOR SC1	6	Ø6.0	40
	SCREWS-SCHRAUBEN-SCHROEF FOR-FÜR-VOOR SS1	15	Ø6.0	50
	WASHER-SCHEIBE-SCHIJF FOR-FÜR-VOOR SC1, SS1	21	Ø6.0	18
	NAIL-NAGEL-NAGEL FOR-FÜR-VOOR FF1	40	Ø2.0	40
	NAIL-NAGEL-NAGEL FOR-FÜR-VOOR F1, R1, R2, T1, T2	1230	Ø2.5	60
	SCREWS-SCHRAUBEN-SCHROEF FOR-FÜR-VOOR SC1, GB1, GB2	18	Ø3.5	35
	SCREWS-SCHRAUBEN-SCHROEF FOR-FÜR-VOOR ES1, ES2, ES3	20	Ø4.5	50
	SCREWS-SCHRAUBEN-SCHROEF FOR-FÜR-VOOR GB1, GB2, GB3	20	Ø4.5	70
	SCREWS-SCHRAUBEN-SCHROEF TB1, TB2, GB1, GB2, GB3 FOR-FÜR-VOOR 003, 005, 007, 014, 016	50	Ø4.5	90
	SCREWS-SCHRAUBEN-SCHROEF FOR-FÜR-VOOR FBI1, FBI2, FBI3, FBI4, FBI5	72	Ø5.0	120

House Sarah - 44 ISO	Material	File Sarah - 44 ISO.dwg	Sheet 13

Pos	Specification-Bestimmung-Omschrijving	Pcs	Profile (mm)	L (mm)
	SCREWS-SCHRAUBEN-SCHROEF FOR-FÜR-VOOR RB1	10	⌀6.0	160
	VENTILATIONGRILLE-VENTILATIONSGITTER-VENTILATIEROOSTER	4		
PR	POST REGULATOR-PFOSTEN REGLER-STUT REGELAAR	2		
TB2	WINDOW-FENSTER-VENSTER (closed-feststehend-gesloten) 630 / 2025 AST_K_PRONKS	1	46x630	2025
TB1	WINDOW-FENSTER-VENSTER (closed-feststehend-gesloten) 630 / 2085 AST_K_PRONKS	1	46x630	2085
	DOUBLEDOOR-DOPPELTÜR-DUBBELE DEUR (right-rechts-rechts) 1500 / 1930 AST_ISO_PL P	2 2 2 2 12 4	1500	1930
	WINDOW-FENSTER-VENSTER (closed-feststehend-gesloten) 1500 / 1930 AST_ISO_K	3 6	1500	1930

House	Material	File	Sheet
Sarah - 44 ISO		Sarah - 44 ISO.dwg	14